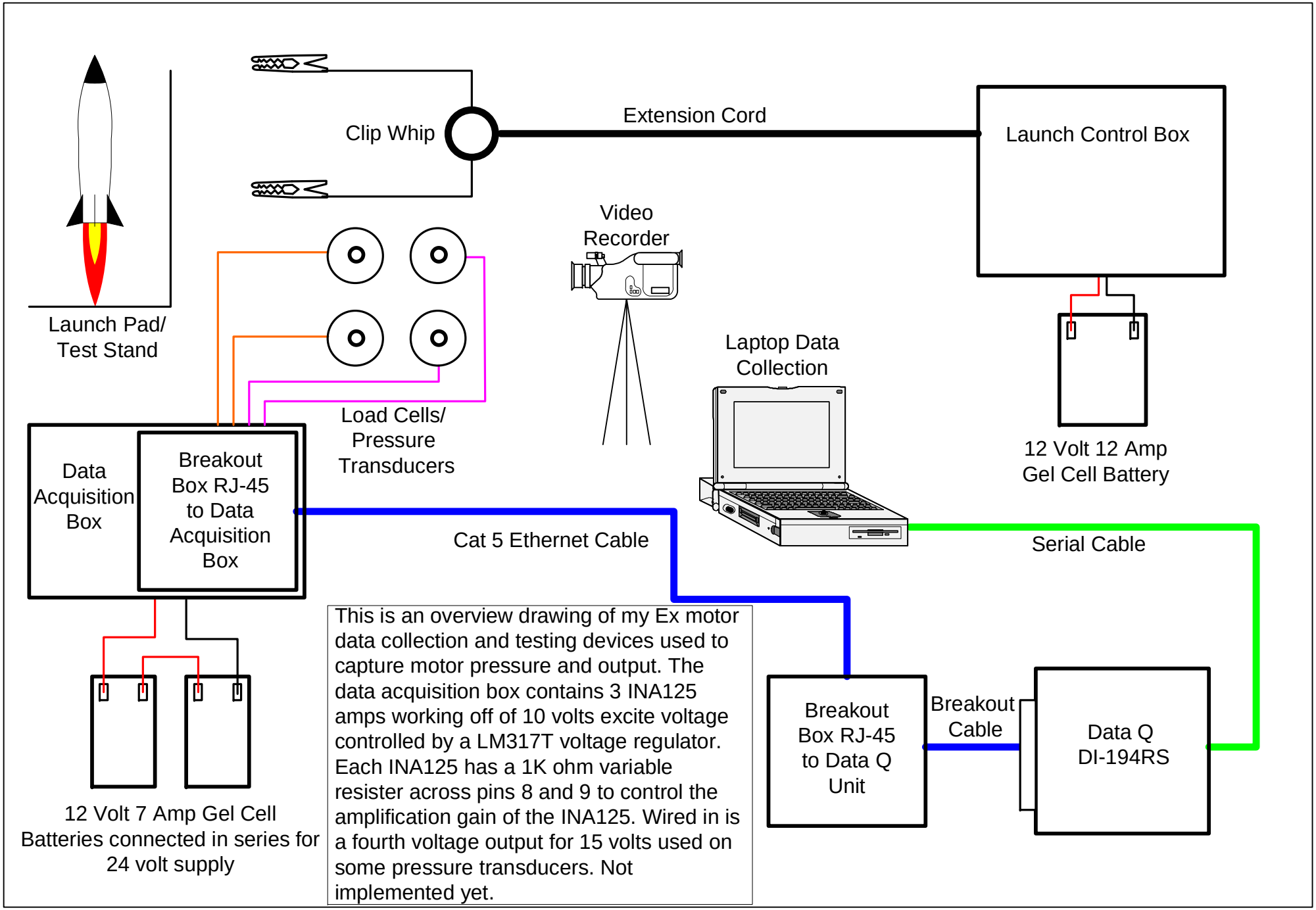

Designed by MB Rocketry Centennial, CO 80015 www.mbrocketry.com	Overview Diagram	File name: Dataq.vsd Date: 08/27/03 Revision: 1a