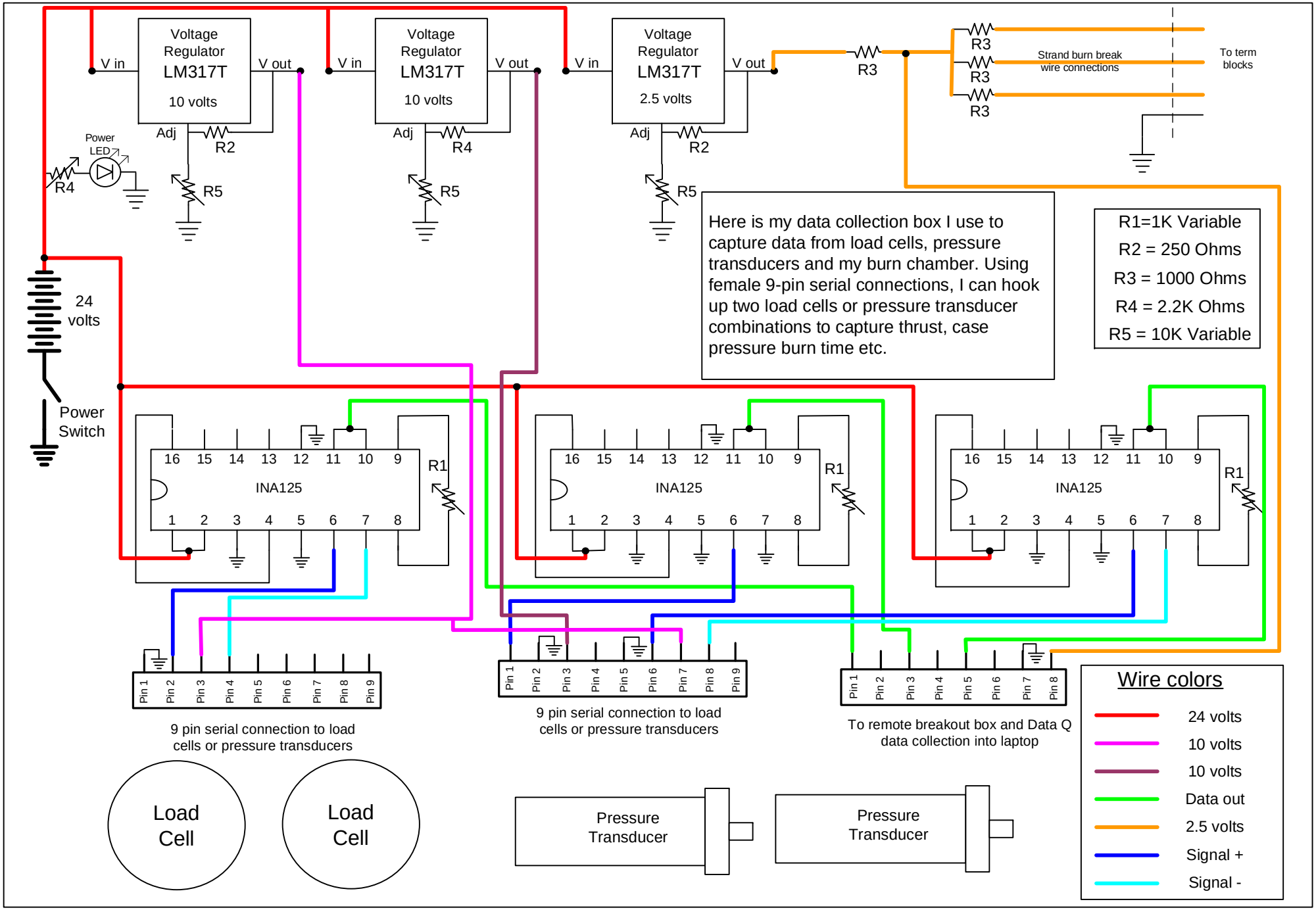

Designed by MB Rocketry Centennial, CO 80015 www.mbrocketry.com	Data Q Wiring Diagram	File name: Dataq.vsd Date: 10/17/03 Revision: 1c